Crossing Paths

WITH WILDLIFE IN WASHINGTON TOWNS AND CITIES

Spring 2004

Building wildlife viewing opportunities for the future

by Dr. Jeff Koenings, WDFW Director

As a Washington resident you are blessed with many opportunities to enjoy wildlife, both at home and away . Our state's varied ecosystems provide one of the richest and most diverse habitats in the nation, home to over 640 vertebrate species, including 365 bird species. This wealth in turn draws some 2.5 million individual viewers who spend nearly $1 billion here annually on wildlife watching.

With that level of interest and participation in wildlife watching, it's important to plan for the future in order to create opportunities that serve viewers while protecting the animals they enjoy.

To achieve those dual aims, the Washington Department of Fish and Wildlife (WDFW) and the state Department of Community, Trade and Economic Development (CTED) have created a joint strategic plan for development of wildlife-viewing tourism.

Written at the request of the Legislature, the plan was recently presented to state lawmakers in its final

(Continued on page 7)

Baby Birds Out of the Nest: To Help or Not to Help?

Sooner or later, most Backyard Wildlife Sanctuary managers come across a baby bird on the ground and a tough choice: Should I rescue it or leave it to fend for itself?

In most cases, it is best not to interfere.

The natural parents do a much better job at raising their young than we could ever do. A baby bird that is featherless must be fed appropriate food every 15 to 20 minutes from sunrise to sunset!

If the bird is fully or partially feathered, chances are it doesn't need your help. As young birds develop they soon outgrow the limited space of a nest. The young birds, referred to as "fledglings" or "branchers" at this stage, typically leave the nest and move about on the ground and on low branches for a few days before they can fly.

Their parents are nearby and continue to care for the birds, answering their demanding calls with regular deliveries of food. The scolding calls coming from the nearby tree are likely the adult birds, voicing their disapproval while they wait for you to leave.

Unless injured, the fledgling bird should be left where it is. Efforts should be made to keep cats, dogs, and curious children away from the bird so the mother can continue to feed it.

Unfortunately, people often interfere and take a healthy bird out of the wild. Not only is this illegal, (except in the case of exotics like starlings, house sparrows, and domestic pigeons), but it also deprives the growing bird of the essential care that only its parents can give.

If you find an uninjured, featherless nestling that has fallen or been pushed out of its nest, replace it in the nest. Don't be overly concerned if the nestling doesn't make it, though. This behavior is actually adaptive for some species so that only the strongest of the brood survive and go on to raise young themselves.

If the nest has fallen down, which is common after windstorms, replace the nest in a tree with the baby bird(s) in it. It is not true that birds abandon their chicks if a person touches them. Birds have a poor sense of smell. But when handling any bird of any age, use gloved hands to protect yourself.

If you can't find the nest or accessing it is too dangerous, put the baby bird where its parents can find it but where it will be safe from cats. Use a small plastic berry basket, margarine tub, or similar container lined with shredded paper towels (no cotton products, which tend to tangle up in birds' feet). With a nail or wire, fasten the makeshift nest to a shady spot in a tree or tall shrub near where the bird was found. Then place the nestling inside, tucking the feet underneath the body.

(Continued on page 4)

Crossing Paths is a twice-yearly newsletter for Washington residents enrolled in the Backyard Wildlife Sanctuary Program.

Westside: 16018 Mill Creek Blvd., Mill Creek, WA 98012 / 425-775-1311
Eastside: N. 8702 Division St., Spokane, WA 99218 / 509-456-4082

www.wa.gov/wdfw

Crossing Paths Newsletter

Writer/Editor: *Madonna Luers*
Contributing Wildlife Biologists: *Russell Link, Patricia Thompson (Seattle-Mill Creek), Howard Ferguson (Spokane), Michelle Tirhi (Tacoma).* ***Printing and Graphics:*** *WDFW Print Shop and the Washington State Printer Graphics Office.*

Washington Department of FISH and WILDLIFE

Living with Washington's Wildlife: Swallows

(Editor's note: This newsletter regularly features excerpts from "Living With Wildlife in the Pacific Northwest," a book-in-progress by WDFW's Seattle-area wildlife biologist Russell Link that focuses on species most often encountered by people.)

Swallows are migratory songbirds that occur and breed in the Pacific Northwest from spring to fall. They are sparrow-sized birds with long, pointed wings and streamlined bodies developed for fast, acrobatic flight. They are seen swooping and flying over fields, orchards, lakes, and anywhere else that flying insects are abundant.

Seven members of the swallow family breed in the Pacific Northwest. Of these seven species, barn and cliff swallows regularly build mud nests attached to buildings, a process that sometimes brings them into conflict with humans.

The **barn swallow** (*Hirundo rustica*) is a distinctive bird with bold plumage and a long, slender, deeply forked tail. It has blue-black upper parts, a reddish throat and breast, and a rust or buff colored belly. Females are slightly duller and shorter-tailed than males. Although they are still common in Washington, Breeding Bird Census data indicate that barn swallows have decreased significantly in the state since 1980.

The **cliff swallow** (*Petrochelidon pyrrhonota*) looks somewhat like the barn swallow, but has relatively broad, round wings and a short, squared-off tail. The back, wings, and crown of the adult are a deep blue, and its belly is light colored.

Feeding

Swallows are insectivores, catching a variety of insects in midair with their wide-gaped bills and expert flight. Barn swallows eat some berries, seeds, and dead insects from the ground, particularly during bad weather.

Swallows will fly several miles from their nest site to forage. Long periods of continuous rainfall make it difficult for adult swallows to find food, occasionally causing young birds to die. Swallows drink mid-flight; as they fly over water they dip their bill to the surface to drink.

Nesting

Barn and cliff swallows construct nests formed from mud pellets that they collect in their beaks. Barn and cliff swallows travel up to a half-mile to gather mud from the edges of ponds, puddles, and ditches. Gathering mud and constructing nests are social activities for cliff swallows; even unmated swallows may build a nest that goes unused.

To find one of their mud sources, look for swallows landing on the ground, which they rarely do other than when nest building. The birds will remain on the ground for a minute or so and then fly off to a nest site. The collection site will be marked with numerous small holes made by the birds as they poke their beaks into the mud several times to get a good load. You may also see swallows flying with feathers or grass — materials used in the final stages of nest building.

Barn swallow nests are cup-shaped; cliff swallow nests are gourd-shaped. The interior of both these birds' nests contains an inner cup lined with grass, hair, and feathers.

Historic nesting sites of both barn and cliff swallows include cliffs, walls of canyons, and vertical banks protected from rain. Today, barn swallows almost always build nests on eaves, bridges, docks, or other man-made structures that have a ledge that can support the nest, a vertical wall to which it can be attached, and a roof. Cliff swallow nests are built on vertical walls, natural or man-made, frequently with some sort of sheltering overhang. Freeways, bridges, barns, and other large buildings are regularly used.

Barn swallows usually nest in single pairs; cliff swallows nest in colonies that may contain a dozen to over 500 nesting pairs. Barn and cliff swallow nests are prone to external parasite infestations. Colonies may not be reoccupied because of heavy infestations, and if parasite populations become too great, both species will prematurely desert their nests, abandoning their young.

Reproduction

Nest building is done by both sexes, and in mild years may begin as early as late March. Time from start of nest building to departure of young is 44 to 58 days.

Brood parasitism is common among cliff swallows. Females will lay eggs in other females' nests and will also carry eggs in their beaks from their own nests to the nests of others.

Both parents take turns incubating three to five eggs, which hatch after 12 to 17 days. Both sexes care for the young, which begin to fly at 20 to 25 days of age. After learning to fly, the young remain in the nest, or near it, to be fed by parents and to roost at night. They leave the nest after a few days and will remain in the area for several weeks.

Barn and cliff swallows can raise two clutches per year. Re-nesting will occur if nests or eggs are destroyed. For example, nests may fall because they were built too rapidly, or may crumble because of prolonged wet or humid weather.

Migration

Swallows are among the "neotropical migrants" that spend six or more months in southern climates, not to avoid cold temperatures so much as for the lack of insects to eat during winter in the north.

Barn and cliff swallows begin their return to northern climes in late winter and early spring. Depending on weather conditions, they are usually first spotted in Washington in late March or early April. Swallows are usually first to begin the southern migration in mid-August to early September. They gather in large groups (sometimes as many as 2,000 birds) on telephone wires and other perches before departing.

Swallows migrate during the day, catching flying insects along the way. They will normally not move into areas unless flying insects are available for food, which occurs after a few days of relatively warm weather – 60 degrees or more.

Attracting Swallows

To best manage your property for swallows, protect nearby undisturbed wild areas, including wetland, lake, or grassy areas of any size used by swallows for drinking, mud collecting, and feeding.

(Continued on page 6)

Winter storm losses can be spring wildlife gains

If your property suffered severe winter storm damage to trees and shrubs this past year, your spring clean-up job may seem overwhelming.

But broken limbs, topped trees, and downed wood don't have to add up to a lot of haul-away work. Your backyard wildlife may benefit for years from leaving some of it in place or piled up on site. Debris and dead wood, especially standing dead trees or live ones with dead tops, known as "snags", make for much needed homes for wildlife.

More than 40 species of birds in Washington use cavities in snags as nesting sites, and many find food in dead wood. Many amphibians, reptiles and mammals also use snags and woody debris for nesting, roosting, and foraging.

This spring you may witness use of your snags by one of the 10 species of "primary cavity nesters" – woodpeckers. These hard-headed birds excavate holes in the wood to make their nests and raise this year's young.

Next spring you'll see new tenants, since woodpeckers are wired to create new nest holes each year. At least 30 species of "secondary cavity nesters," like chickadees, nuthatches, bluebirds, swallows, wrens, and owls will take up residence in the holes the woodpeckers provided the year before.

Snags that are potential safety problems because they are close to your home or other buildings should, of course, come down, or be cut down to a size that won't cause damage. Otherwise, leave snags in place, especially groups of various sized snags, which seem to attract wildlife most (perhaps because they provide both "bed" and "breakfast".)

Create wood, brush, and debris piles from other storm damage. Three to five-foot high and wide piles create more cover and potential nesting sites for some birds like towhees that prefer to be closer to the ground. They also serve rabbits, raccoons, and other small mammals, plus toads, frogs, lizards, snakes, and other reptiles and amphibians.

"Attacking" birds aren't crazy

Spring and summer bring out what looks like the worst in birds – "attacks" on hapless humans.

Dive-bombing crows, swooping swallows, and hissing geese are not crazy. They're all just defending territory or young at this time of year, and their aggressive behavior is part of what makes them successful.

To avoid being a target, stay away from nesting areas as much as possible until the young are flying (three to four weeks after eggs hatch) and the parents are no longer so protective. If you must walk past a nest, wave your arms slowly overhead to keep the birds at a distance. Or just wear a hat or helmet, or carry an umbrella. Don't attempt to "rescue" chicks found outside nests when adult birds are calling loudly nearby.

Beyond the nesting season, some birds are aggressive when they become accustomed to being fed and lose natural fears of humans. Ducks, geese and gulls around city and suburban waterways where they are fed may come to expect food from every human. Their begging methods may actually include chasing, hissing, and pecking; when food is flung their way to ward them off, their bad behavior is reinforced. (This "conditioned response" technique was actually used to train the gulls and crows that chased the actors in the Hitchcock thriller "The Birds".) In these cases, pick up small children and leave the area. If necessary, act aggressively toward the birds by waving your arms and shouting.

Other hunger-motivated behavior by birds is less threatening. Hummingbirds are known to buzz people wearing red, perhaps thinking that they were a group of nectar-rich flowers.

Shelve it for robins, phoebes

Robins and phoebes will not nest in enclosed nest boxes, but they readily use platforms or shelves in sheltered areas around buildings. If that means you've got birds nesting where you don't necessarily want them, you might try providing a nesting shelf for them in a space that works for you, too.

A nest shelf is very easy to make. All you need are the following pieces of wood:

- 1 1 x 6 x 9-inch backboard
- 2 1 x 6 x 4-1/2-inch nest cradle halves
- 1 1 x 2 x 9-inch end

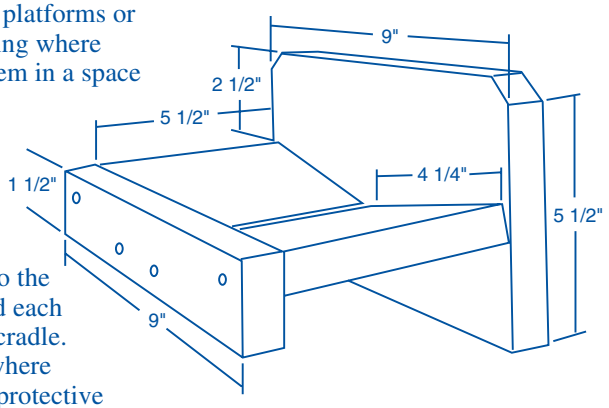

Using 1-3/4 to 2-1/4-inch galvanized nails, attach the two nest cradle pieces to the middle of the backboard as shown in the illustration, tilting them inward toward each other to form the nest cradle. Then attach the end piece as shown to secure the cradle.

A favorite spot for placing such a nest shelf is under the eaves of a building where birds are protected by the overhang. You can also use the trunk of a tree under protective branches. Either way, mount the shelf at least 10 feet above the ground. Allow at least six inches of clearance from the shelf to the overhang to accommodate either robins or phoebes.

Baby Birds Out of the Nest: To Help or Not to Help *(continued from page 1)*

The parents will usually come back in a short time and will feed the babies in the container just as if it were the original nest. Often, you will see the mother going back and forth between each "nest," feeding both sets of babies.

There are times when you should consider quickly getting a baby bird to a licensed wildlife rehabilitator:

- If the parent birds don't find the baby in your makeshift nest within two hours
- If you are certain that the mother of a baby bird is dead
- If the bird was attacked by cat or dog or otherwise hurt or sick (unable to flutter wings, bleeding, wings drooping unevenly, weak or shivering)

Your local Washington Department of Fish and Wildlife (WDFW) office can direct you to the closest wildlife rehabilitator. Since many rehabilitators are veterinarians, or work closely with veterinarians, you might also be able to locate them through veterinarian contacts.

While waiting for a rehabilitator to pick up the bird, or in the more common case of delivering the bird to them, gently pick up the bird using gloved hands and place it in a well-ventilated, covered box or paper bag that is padded with paper towels. Keep the baby bird warm and in a quiet, dark place until it is picked up or delivered to a rehabilitator.

If the bird is cold, put one end of the bird's container on a heating pad set on low. Or fill a zip-top plastic bag or plastic beverage container with a screw lid with hot water. Wrap the warm water container with cloth, and put it next to the animal. Make sure the container doesn't leak, or the animal will get wet and chilled.

Do not give the baby bird any liquids. They get all they need from their food and very often will inhale any liquid. Wash your hands after contact with the bird. Wash anything the bird was in contact with — towel, jacket, blanket, pet carrier, etc. — to prevent the spread of diseases and/or parasites to you or your pets.

Be realistic about the survival chances of injured or orphaned young birds. Just like the adaptive behavior of pushing weak chicks out of a nest so that only the strongest survive, other circumstances that result in the death of young birds are part of nature's way of balancing species populations.

Award-winning BWS gardener invites tours

Editor's note: When we learned that BWS Manager Stephen Lamphear's self-described "Lazy Garden" was a contest winner featured in a national magazine that solicited his writing a regular gardening column, we asked him to describe his experience. His wildlife-friendly garden is often on scheduled summer garden tours, but with advance notice he's also happy to host fellow BWS-managers. Contact him at 206 439 7362 or stephen.lamphear@comcast.net.)

by Stephen Lamphear, "The Lazy Gardener"

My hillside garden in Burien has been in the WDFW Backyard Wildlife Sanctuary program for more than 10 years. Before that, my Ballard garden was enrolled. It's been delightful to learn about the critters that share my retreat. Habitat-friendly gardening has increased the critter population many times over: Anna's and rufous hummingbirds, evening and black-headed grosbeaks, song sparrows, wrens, goldfinches, golden-mantled squirrel, merlins and other raptors, red fox, opossums, salamanders, too many raccoons, beautiful bugs and spiders.

My public gardening career started in 1997 when I won the Arboretum Foundation Pacific Garden Contest. The first prize of a trip to London for the Chelsea Flower Show was the first time I traveled to Europe. While there I visited the Baroness Rothschild's garden, of which I am still in awe.

After the contest win, my garden was featured in an article and cover photo for the Summer 2000 issue of Garden, Deck and Landscape magazine. Photos of my garden are also included in Barbara Blossom's 2000 book *Backyard Retreats*. In 1998, the *Highline Times/Des Moines News* asked me to write a regular garden column. Today, the 'Lazy Gardener' also runs twice monthly in the *West Seattle Herald* and the *Federal Way News*.

As a member of the Burien City Council since 1998, I encourage eco-friendly public policies. I've served on the Watershed Resource Inventory Area (WRIA) 9 forum charged with salmon restoration. In 1996, I co-founded the annual Burien Garden Tour, and founded the Highline Botanical Garden (SeaTac) in 1997.

My "Lazy Garden" continues to develop as a trial and learning resource for low impact garden practices. I think the attention it's received proves that a garden can be sophisticated and attractive to people, as well as critters.

Bird surveyors can keep counting

Our note in last fall's edition about discontinuing WDFW's ten-year-old winter bird feeding surveys prompted many disappointed responses. Although we can't resurrect our survey at this time, those who want to keep counting are encouraged to participate in Cornell University Ornithology Laboratory's "Project FeederWatch," a national program after which our own survey was patterned. You can learn how to join Project FeederWatch at http://birds.cornell.edu/pfw/. The website also has links to other citizen science programs with opportunities to make your year-round observations of birds count.

Processions of Species celebrate Earth Day

You may have a procession of species coming through your backyard these days with spring migrations in full swing.

But you've never seen processions of the species like the ones coming to Spokane and Olympia in celebration of Earth Day.

Earth Day is officially **April 22**. But in Spokane it will be celebrated the weekend before, **April 17**, in Riverfront Park, including the fifth annual "Procession of the Species." To the beat of primitive drumming, all ages of participants parade through the park donning costumes, masks, and other homemade creations of their favorite animal or plant species. For more on the Spokane Procession, contact The Lands Council at 509-838-4912.

The original Washington Procession of the Species will celebrate its tenth anniversary in Olympia on **April 24**, this year with a theme that BWS managers can relate to: "Nurturing Nature in your Neighborhood." Olympia's Procession founder'**Eli Sterling** is teaching an Evergreen College class on community empowerment in which students are working with neighborhood associations to develop neighborhood wildlife sanctuaries. For more on the Olympia Procession, see www.procession.org.

Celebrate spring at Grays Harbor

Witness one of Washington's greatest spring bird migrations at the 9th annual Grays Harbor Shorebird Festival, April 30 – May 2. Thousands of birds of dozens of species come through Bowerman Basin at Grays Harbor National Wildlife Refuge near Hoquiam on the Olympic Peninsula on their way to northern breeding grounds. Co-sponsored by Grays Harbor Audubon Society, the city of Hoquiam and the refuge, the festival has activities for all ages. For more information, see http://www.shorebirdfestival.com/ .

Birds of a feather nest together

This year's International Migratory Bird Day (IMBD) on **May 8** (always the second Saturday of May), is focused on "birds of a feather that nest together."

Colonial nesting behavior has been a successful strategy for one in eight species of birds worldwide. Many colonial-nesting species are aquatic birds, such as herons, egrets, gulls, terns, and puffins. But several landbirds such as swallows and blackbirds are also colonial.

Colony sites take many forms: mud nests plastered on vertical surfaces; burrows riddling a seaside cliff, a stretch of depressions in a sandy beach, or bulky stick nests forming a woodland rookery; what defines them is the close proximity and social behavior of the colony members.

Colonial nesting probably evolved in response to shortages in suitable, safe nesting sites within range of food sources. Birds nesting in colonies may enjoy "safety in numbers," for example, when colony members cooperate to chase off predators. Also, colonial nesters may learn about spotty and scattered food supplies from observing their neighbors.

But colonial nesting behavior does have disadvantages: a single event or incident can affect the nesting success of a large number of birds. There have always been natural threats to colonies such as storms and predators, but human activities have brought many new threats to colonies. The introduction of exotic species to breeding areas, disturbance of colonies, and outright loss of breeding habitat threaten many species of colonial birds.

Colonial nesting birds are often highly visible and impressive, garnering the attention to migratory bird conservation that this special celebration is all about. At least two Washington communities are celebrating IMBD with special events:

- Leavenworth's Bird Fest, May 7-9, features guided bird-watching tours in spectacular habitats ranging from snow-capped mountains to sunny pine forests, wildlife art exhibits and a songbird concert at Canyon Wren Recital Hall. It's sponsored by Audubon Washington, the Chelan-Douglas Land Trust, Okanogan & Wenatchee National Forests, the Leavenworth Chamber of Commerce, North Cascades National Park Service Complex, the North Central Washington Audubon Society, U.S. Fish and Wildlife Service and Upper Valley Arts. For more information see'www.leavenworthspringbirdfest.com.

- Edmonds' Marsh Day, May 8, features guided bird walks in a wetland habitat and other activities for all ages. Co-sponsored by the Pilchuck Audubon Society and Edmonds Parks and Recreation Department, it runs 9 a.m. to 2 p.m. For more information, contact Sally Lider, 425-771-0227, lider@ci.edmonds.wa.us.

For more information about IMBD and events in other areas, see http://birds.fws.gov/imbd/.

Go birding off the beaten track

Looking for an easy-to-reach but out-of-the-way place to listen to the flutelike song of the meadowlark or the raspy call of the red-winged blackbird? Try Republic in Ferry County and the Kettle Valley Songbird Festival, **May 21-23**. This second annual event features guided birdwatching tours and lectures, with bonus activities like a fossil dig at the Eocene Fossil Dig Site and Stonerose Interpretive Center. For more information contact the Highlands Birding Group of Ferry County at 509-775-0441 or birder@rcabletv.com or see www.ferrycounty.com/KettleValleySongBirdFestival/.

Living with Washington's Wildlife: Swallows *(continued from page 2)*

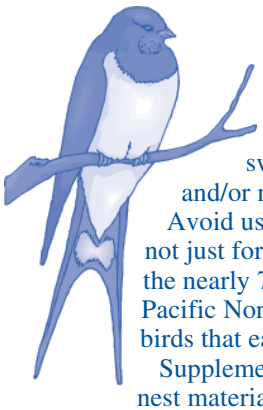

Also, retain as many large snags – dead or dying trees — as possible for swallow perching and/or nesting.

Avoid using insecticides, not just for swallows, but for the nearly 70 percent of Pacific Northwest breeding birds that eat insects.

Supplementing the supply of nest materials and installing nest boxes are other ways to enhance your property for swallows. Swallow species that use nest boxes are violet-green swallows, tree swallows, and purple martins; barn swallows will use nesting platforms.

Have nesting materials and boxes available for use by early March. Mud can be provided to barn swallows and cliff swallows by spraying a shaded area with water to create a mud puddle. A mud-filled, elevated birdbath may serve as a cat-safe mud-gathering site for swallows. Claylike soil with some humus is a good building material because plant fibers strengthen the nest. Swallows will also gather small downy feathers and 3-inch lengths of dry grass placed nearby.

Preventing Conflicts

It has been speculated that one reason swallows choose to nest on door stoops, light fixtures, and porch fronts is because the close proximity to humans keeps crows and other predators away. The birds will even risk cat predation and human vandalism and nest close to the ground if the location is in a place frequented by humans. The barn swallow's close association with humans in Europe goes back over 2,000 years. Thus, when you thwart a barn or cliff swallow's nesting effort, you may be denying the birds their only chance at successful reproduction.

Conflicts with swallows occur primarily because of the droppings and other debris they deposit in inconvenient places. (Swallow droppings are NOT a public health concern unless hundreds of nests are involved.)

When swallows first hatch, the parents eat their droppings, which keeps the nest clean and insect free. After a few days, the adults carry the droppings away from the nest to prevent detection by predators. After about the twelfth day, the young back up to the edge of the nest and defecate out over the rim.

Placing newspaper or some similar material where droppings accumulate can solve the problem. As necessary, the paper and droppings can be added to a compost pile, dug into the ground (droppings make wonderful fertilizer), or placed in the garbage. Similarly, a blanket or sheet can be used to cover a car or other structures and moved when needed.

Another solution is to install a board under the nest(s) to catch the droppings and debris. Because of its close proximity to the nest, the board should be cleaned as needed to prevent infestations of insects and mites that may live in the accumulated debris.

If for some reason swallows nesting on a building or other structure cannot be tolerated, a barrier can be installed. Barriers include any physical structure placed between the swallow and the structure. A permit is not required for this method if it is done before the birds arrive, during nest building when there are no eggs or young in the nest, or after the birds have left for the winter. If swallows have eggs or young in the nest, exclusion may not be used without a permit.

To prevent barn swallows from nesting on door jambs, window jambs, and other sites on the side of a building, cover the area with bird-netting or 1-inch mesh chicken wire. Drape the material from the outer edge of an eave down to the side of the building. Remove wrinkles and folds that could trap or entangle swallows or other birds.

Bird netting and chicken wire are available from nurseries, hardware stores, and farm supply centers. Some pest-control companies sell a heavy-duty netting material with a larger mesh than common black netting used to protect fruit from birds. The netting is not as likely to create problems for songbirds, which sometimes get caught in the smaller mesh netting.

Attach the barrier using staples, brass cup-hooks, adhesive-backed hook-and-loop Velcro, trash-bag ties, or other fasteners. The barrier may also be first stapled to or wrapped once or twice around wood laths, which are then attached to the structure. This technique can also be modified to keep swallows from entering a breezeway or similar sites.

Another technique is to hang a curtain of bird netting or chicken wire from the eave. The curtain should be 3 to 4 inches from the wall and extend down from the eave 18 inches or more.

A solution for small areas is to install aluminum foil, aluminum flashing, or heavy plastic over the spot where swallows nests are unwanted. The smooth surface will prevent swallows from adhering mud to the wall. Painting the area with a glossy latex paint may also be effective. It may be possible to offer barn swallows an optional nesting site by constructing a nest platform.

Hawk, owl, and snake models, noisemakers, revolving lights, red-and-silver flash tape, and hanging pie tins are unlikely to deter swallows.

According to federal law, nest removal is permissible only if it is not occupied by adult birds or no eggs have been laid. At the first sign of nest building, use a water hose or pole to knock down nest materials. Because swallows are persistent at rebuilding nests, you will need to continually remove the nest mud for several days until the birds stop. Swallows are strongly attracted to old nests or to the remnants of deteriorated nests, so all traces of mud should be removed.

Swallows are federally protected and any permit to lethally control them in extreme conflict cases is issued by the U.S. Fish and Wildlife Service. Some examples are concerns for aircraft safety from a nesting colony at an airport or potential food contamination from a colony over a loading area at a food-processing center. In most cases a permit for lethal control will not be issued for swallows nesting on a residence or other buildings and causing aesthetic damage.

Hot peppers might discourage feeder raiding

If you've got a problem with squirrels or other mammals raiding your bird feeders, hot peppers might be one way to discourage them.

Capsaicin, the pungent compound found in Capsicum peppers that causes the burning sensation when you eat hot peppers, is used to treat bird seed to try to deter squirrels. Cornell University's Lab of Ornithology is still looking into this method, but at least one study showed that when capsaicin-treated sunflower seed was used in feeding trials, most squirrels spent less time at those feeders and ate less seed. The study also showed that the capsaicin had no effect on the composition of the bird population visiting those feeders.

BWS manager Rob Saecker of Olympia explains that peppers have evolved to discourage mammalian predation and encourage avian predation, because their seeds are destroyed by mammalian digestion, but not by avian digestion. So birds eat hot peppers without harm, and then distribute the seeds far and wide.

"As for the effects on squirrels," Rob says, "I can attest that adding cayenne to my suet has reduced the frequency of squirrels at my suet feeders. As for their ability to adjust to the taste of hot pepper, I would assume that would be similar to larger mammals, where some learn to prefer the taste of food with pepper, and go to great lengths to find ever hotter pepper varieties with which to spice their food. Habaneros, anyone?"

Building wildlife viewing opportunities for the future *(continued from page 1)*

form. The planning document was built on input from a conference last September which drew 150 participants representing a broad spectrum of wildlife tourism interests.

One aim of the strategic plan is to assist local communities, especially in the state's rural areas, in developing sound wildlife tourism activities and events.

Among other elements, the strategic plan proposes:

- Developing wildlife viewing sites on WDFW lands and provide matching grants for local capital projects
- Assigning an eastern Washington watchable wildlife biologist to coordinate efforts east of the Cascades that protect wildlife
- Developing a watchable wildlife site inventory database for inclusion in CTED's www.experiencewashington.com interactive map
- Marketing Washington as a national and international wildlife viewing destination

Of course, these kinds of efforts require new funding. With the current economy creating financial challenges on the state level and elsewhere, the best hope for realizing these efforts is likely to be through partnerships with other entities interested in promoting wildlife viewing.

Such partnerships could be fostered by creation of a Washington Watchable Wildlife Coalition. Such a group would help provide professional and financial assistance to communities and conduct regular wildlife viewing conferences.

I'm excited about this new venture and hope that you, who are among Washington's most avid wildlife viewers, will help us make some of these things happen.

The Strategic Plan for Development of Wildlife Viewing Activities in Washington can be seen on our website at wdfw.wa.gov/viewing/wildview.

June 5-6: Spokane County Bird Fair

The fifth annual Backyard Bird and Plant Fair is Saturday, June 5, and Sunday, June 6, at Firwood Nursery, 8403 W. Burroughs Road, just south of Deer Park in northern Spokane County. This popular, free event runs 10 a.m. to 4 p.m. each day, featuring WDFW's Backyard Wildlife Sanctuary program, Spokane County Cooperative Extension and Master Gardener experts, tours of a "naturalized" landscape, and vendors with plants and birding supplies.

Remember your bats

Bats may be one of your most common backyard mammals and one of your most beneficial neighbors. But they tend to be forgotten, perhaps because they're active at night, more likely because of centuries-old myths.

WDFW biologists Michelle Tirhi and Gerald Hayes are among others trying to change that with development of a Washington Bat Conservation Plan that outlines bat ecology, habitat needs, and conservation goals. Plan development is with Bats Northwest, a non-profit organization for bat conservation and research, and the Washington Bat Working Group of bat experts from federal and state agencies, private timber companies and Bats Northwest members. The state plan is directly connected to the North American Bat Conservation Partnership (NABCP) Strategic Plan.

North America is home to 148 of the world's nearly 1,000 species of bats. Of these, 45 species live in the U.S. and 15 are found in Washington.

In 1971, the American Association for the Advancement of Science concluded that bats were ecologically essential and some species were rapidly declining and in need of help. In response to anti-bat campaigns in the late 1970's, Bat Conservation International (BCI) was founded to correct misperceptions about bats through education, research, and communication. NABCP was formed in 1999 as an international alliance of agencies and organizations committed to funding bat research and identifying continent-wide priorities for bat conservation in their strategic plan. WDFW is part of NABCP's Western Working Group for developing conservation strategies for western bat species. Another regional collaboration is the Northwest Bat Cooperative, an alliance interested in cooperatively funding research in the Pacific Northwest, most recently bat selection of roosts in forested habitats.

You can do your part by learning more about how to live with the abundant bat species in your own backyard, like the Little brown bat (*Myotis lucifugus),* or ways you can help declining species, like the Keen's Myotis'*(Myotis keenii)* at www.batsnorthwest.org.

Crossing Paths
WITH WILDLIFE IN WASHINGTON TOWNS AND CITIES
600 Capitol Way N • Olympia WA • 98501-1091

PRSRT STD
US POSTAGE PAID
OLYMPIA WA
PERMIT #26

Washington Department of Fish and Wildlife
Backyard Wildlife Sanctuary Program

Westside: 16018 Mill Creek Blvd.,
Mill Creek, Wa. 98012 / 425-775-1311
Eastside: N. 8702 Division St.,
Spokane, Wa. 99218 / 509-456-4082

The Washington Department of Fish and Wildlife will provide equal opportunities to all potential and existing employees without regard to race, creed, color, sex, sexual orientation, religion, age, marital status, national origin, disability, or Vietnam Era Veteran's status.

The department receives Federal Aid for fish and wildlife restoration.

The department is subject to Title VI of the Civil Rights Act of 1964 and Section 504 of the Rehabilitation Act of 1973, which prohibits discrimination on the basis of race, color, national origin or handicap. If you believe you have been discriminated against in any department program, activity, or facility, or if you want further information about Title VI or Section 504, write to: Office of Equal Opportunity, U.S. Department of Interior, Washington, D.C. 20240, or Washington Department of Fish and Wildlife, 600 Capitol Way N, Olympia WA 98501-1091.

Electronic delivery available

A few Backyard Wildlife Sanctuary managers are getting this newsletter via e-mail notification of its posting on WDFW's website, rather than a printed copy in the mail. If you want electronic delivery of future editions, send your complete name and current delivery address, along with your e-mail address, to newsletter editor Madonna Luers at luersmel@dfw.wa.gov.

What's Your Habitat?

April 19-25, 2004 marks the 65th annual National Wildlife Week celebration of wildlife and wild places with the theme "What's Your Habitat?" Sponsored by the National Wildlife Federation, the celebration encourages kids and adults across the country to learn and experience nature - starting in their own community, with their own "habitat." For more information and promotional materials, see www.nwf.org/nationalwildlifeweek.

Tell Your Friends:

◆ ◆ ◆ *Personalized Plates Help Wildlife* ◆ ◆ ◆

The Backyard Wildlife Sanctuary program, along with other non-game functions of the Washington Department of Fish and Wildlife (WDFW), is funded by the sale of Washington state personalized motor vehicle license plates. These distinctive plates — in your choice of unclaimed word(s) up to seven letters — cost an extra $46 for the first year and an extra $30 for each subsequent year. You can pick up an application form at any state licensing or WDFW office, or by contacting the Department of Licensing at P.O. Box 9042, Olympia, WA 98507, 360-902-3770 (telephone menu option #5).